SMP-FSBA-645	REVISIONS				
DRAWING NO.	REV	DESCRIPTION	DATE	ECO	APPR
THIRD ANGLE PROJ.	A	RELEASE TO MFG	2/25/05	45416	

NOTES:

1. MATERIALS AND FINISHES:
   - BODY - BeCu, GOLD PLATING, .000030 [0.8] THICK OVER NICKEL
   - CONTACT - BeCu, GOLD PLATING, .000030 [0.8] THICK OVER NICKEL
   - INSULATOR - PTFE
2. ELECTRICAL:
   - A. IMPEDANCE: 50 OHM
   - B. FREQUENCY RANGE: DC - 26.5 GHz
   - C. VSWR(RETURN LOSS): 1.2 (20.8 dB), MAX. DC-10GHz
     1.4 (15.6 dB), MAX. 10-18GHz
     1.5 (14 dB), MAX. 18-26.5GHz
   - D. DIELECTRIC WITHSTANDING VOLTAGE: 500 VRMS, MIN.
3. PHYSICAL:
   - A. DURABILTIY: 100 CYCLES MIN.
   - B. ENGAGEMENT FORCE: 15 LB [67 N] MAX
   - C. DISINGAGEMENT FORCE: 2 LB [9 N] MIN
   - E. TEMERATURE RANGE: -65° C TO 165° C
4. PACKAGING:
   - A. QUANTITY: SINGLE PACK
   - B. MARKING: AMPHENOL, SMP-FSBA-645, DATE CODE

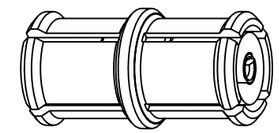

SCALE 6.000

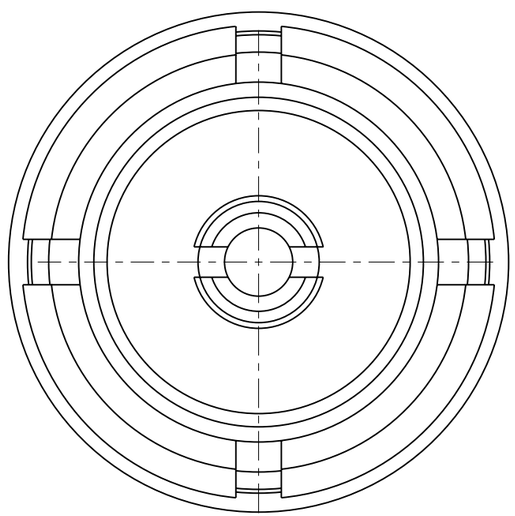

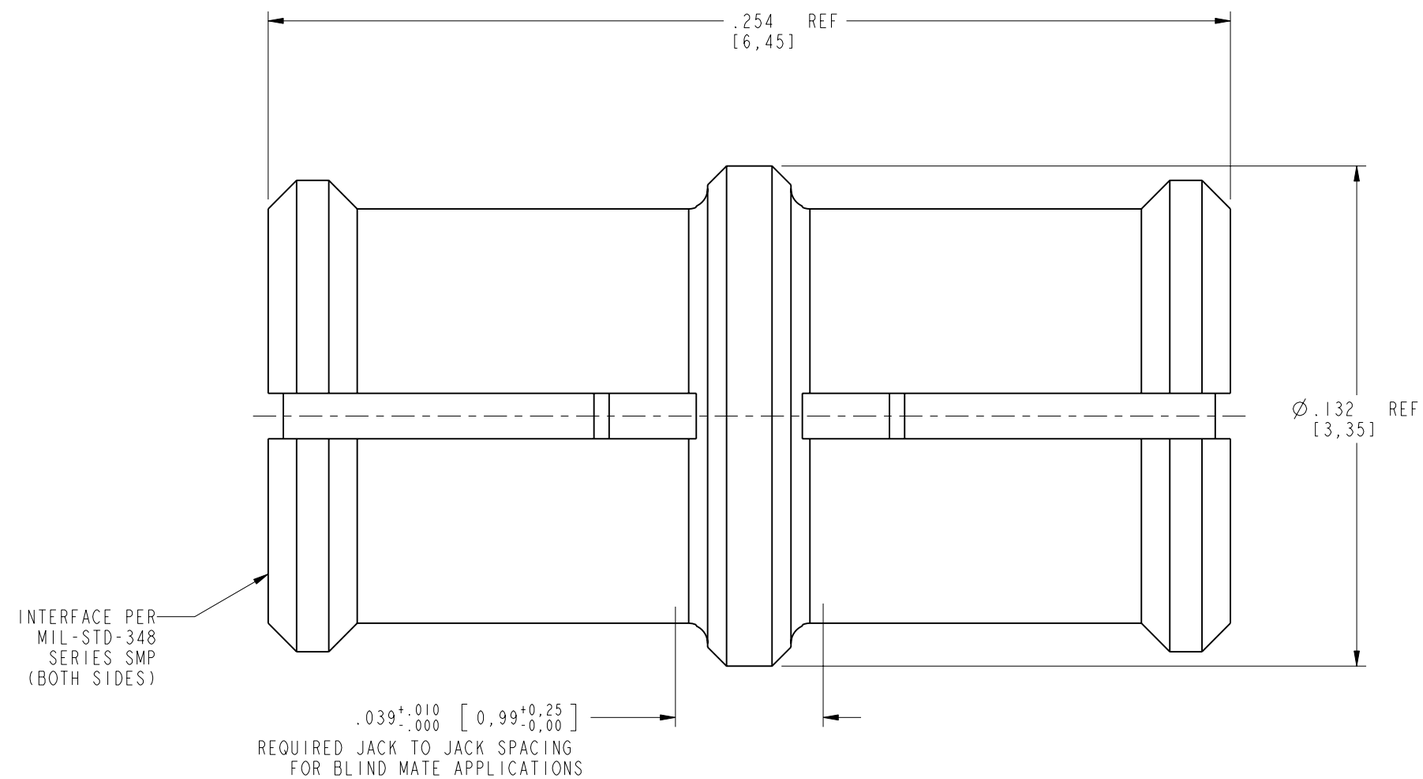

CUSTOMER OUTLINE DRAWING

ALL OTHER SHEETS ARE FOR INTERNAL USE ONLY

UNLESS OTHERWISE SPECIFIED, DIMENSIONS ARE IN INCHES AND TOLERANCES ARE:

2 PLACE DECIMAL	3 PLACE DECIMAL	ANGLES
±.015 (0,381 mm)	±.005 (0,127 mm)	± 1°

NOTICE - These drawings, specifications, or other data (1) are, and remain the property of Amphenol Corp. (2) must be returned upon request; and (3) are confidential and not to be disclosed to any person other than those to whom they are given by Amphenol Corp. The furnishing of these drawings, specifications, or other data by Amphenol Corp., or to any other person to anyone for any purpose is not to be regarded by implication or otherwise in any manner licensing, granting rights or permitting such holder or any other person to manufacture, use or sell any product, process or design, patented or otherwise, that may in any way be related to or disclosed by said drawings, specifications, or other data.

MATERIAL

REFERENCE
GEN# ASSYF4_SMP
EAR# 796, PREVIOUSLY 322 &1693
615X-1718-100

DRAWN	MIKE HOYACK	DATE 10-Dec-02
ENGINEER	MIKE HOYACK	DATE 10-Dec-02
APPROVED	OWEN BARTHELMES	DATE 2/23/05
CAD FILE	I:\SMP\SMP-FSBA-645	

TITLE
ASSEMBLY
FEMALE TO FEMALE

Amphenol RF
Danbury, CT, USA
Tainan, Taiwan
Shenzhen, China
www.amphenolrf.com

SCALE: 25.0:1 | SHEET 2 OF 2

CODE ID	DWG SIZE	DRAWING NO.	REV
74868	B	SMP-FSBA-645	A