THIS DRAWING IS UNPUBLISHED. RELEASED FOR PUBLICATION -,- .
© COPYRIGHT - By - ALL RIGHTS RESERVED.

LOC	DIST
AF	50

REVISIONS

P	LTR	DESCRIPTION	DATE	DWN	APVD
	E	REVISED PER ECR-12-013219	08JAN13	KH	KR

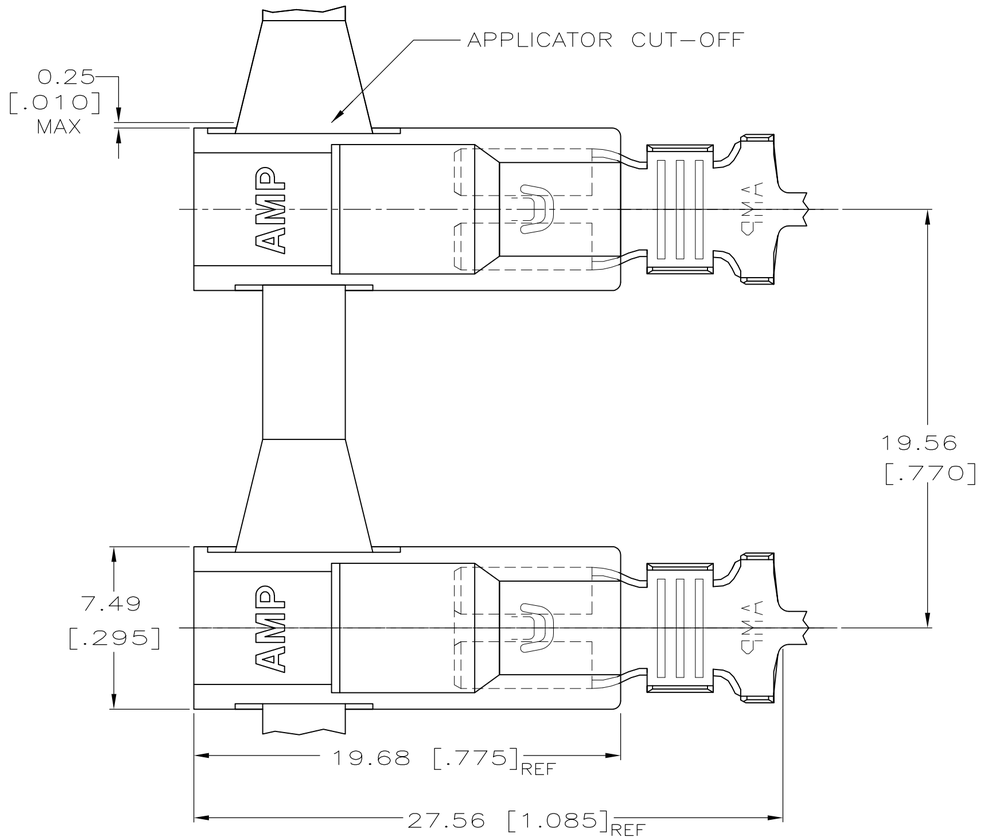

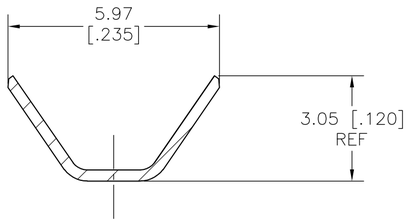

SECTION A–A
SCALE 8:1

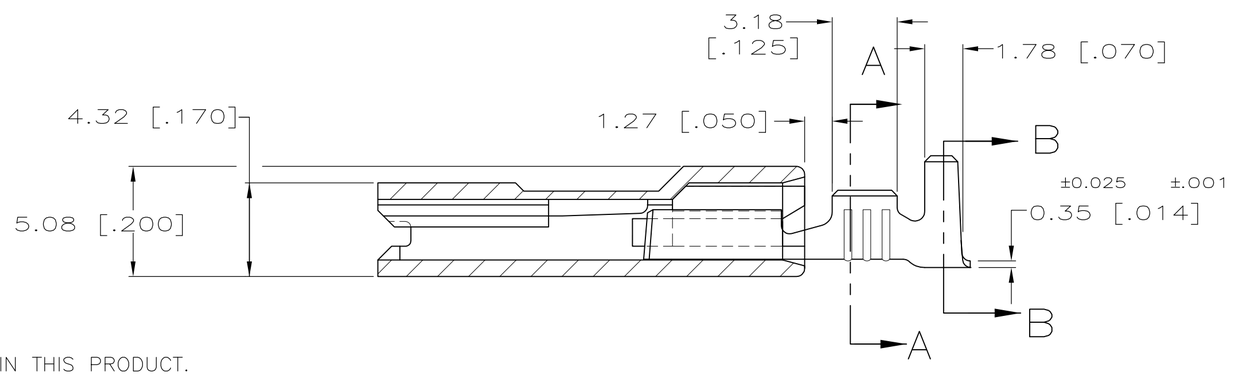

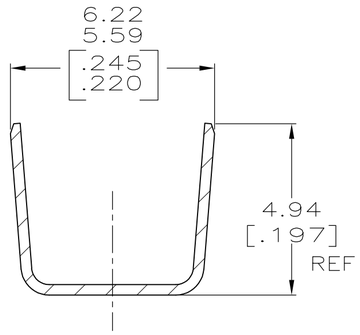

SECTION B–B
SCALE 8:1

1 FASTON TERMINALS, BASE P/N 1742110, ARE USED IN THIS PRODUCT.

2 TIN PLATE PER MIL-T-10727 .002032 [.000080] MIN.

3 MATING TAB THK TO BE 0.51±0.025 [.020±.001]

4 WIRE SIZE IS [#18-#16 OR TWO #18'S] AWG.

5 INSULATION RANGE IS 2.67-5.33 OR TWO AT 2.67 MAX, [.105-.210 OR TWO AT .105 MAX].

HOUSING MATERIAL & COLOR	TERMINAL MATERIAL & FINISH	PART NO.
6/6 NYLON, V-2 NAT	BRASS TIN PL. (2)	521293-2
6/6 NYLON, V-2 NAT	BRASS PLANE	521293-1

THIS DRAWING IS A CONTROLLED DOCUMENT.

DIMENSIONS: mm [INCHES]

TOLERANCES UNLESS OTHERWISE SPECIFIED:
0 PLC ± -
1 PLC ± -
2 PLC ± -
3 PLC ± 0.25 [.010]
4 PLC ± -
ANGLES ± -

MATERIAL: SEE TABLE
FINISH: SEE TABLE

DWN JR RUTH 31MAR00
CHK MS FEHER 31MAR00
APVD N DEIBERT 31MAR00
PRODUCT SPEC 108-1285
APPLICATION SPEC 114-2124
WEIGHT –

TE Connectivity

NAME: ASSEMBLY, RECEPTACLE, ULTRA-POD, 4.8 [.187] SERIES

SIZE	CAGE CODE	DRAWING NO	RESTRICTED TO
A2	00779	C-521293	—

CUSTOMER DRAWING | SCALE 5:1 | SHEET 1 OF 1 | REV E

521293